SIGN	DESCRIPTON	DATE	APPROVER
△1	----------	2006,10,05	TONY

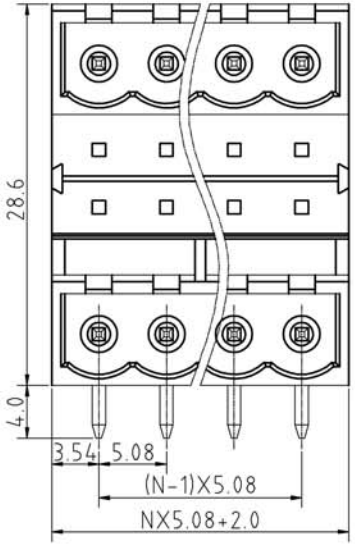

N=Number of contacts

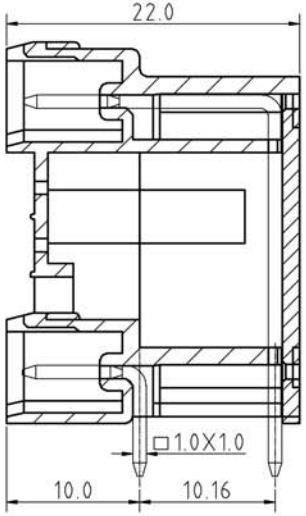

P.C.B. LAYOUT

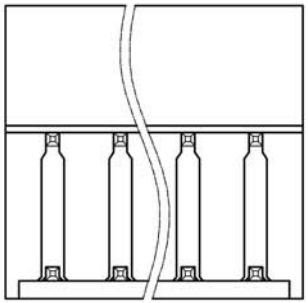

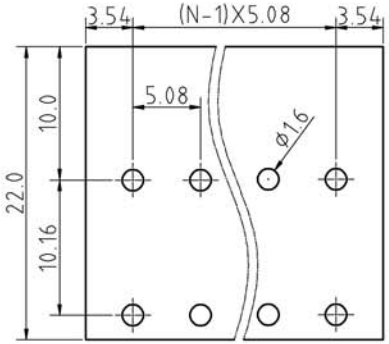

Technical Data:

Material:

Solder Pin: Copper Alloy with Tin plated

Insulator body(housing): Polyamide

(Glass filled)(UL94V-0)

Electrical

Voltage rating: 300VAC

Current rating: 16A

Withstanding Voltage: AC 2500V(1min)

Mechanical:

Using temperature Range: -40°C to +105°C

Soldering temperature:+250°C,5seconds Max.

Ordering Information:

F85-J-E XX-0 0 0 X 0

02	2Pin	5	Green
To	To	6	Blue
24	24Pin	A	Black

WELINK 上海拓尔普电子科技有限公司 Welink International Co.,LTD.

TOLERANCE X. ±0.50 X.X ±0.30 X.XX ±0.20 X° ±1°	APPROVED:		NAME: F85-J Pitch 5.08mm Series
	CHECKED:		
	DRAWN: Yang Ming 2012,06,20		
	UNITS: mm	REV: A	PART NO: F85JEXX000X0
	SCALE: 4 / 1	PAGE: 1 / 1	DWG NO: 9F85JE001A