SIGN	DESCRIPTON	DATE	APPROVER

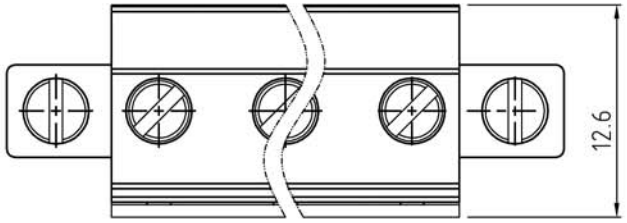

N=Number of contacts

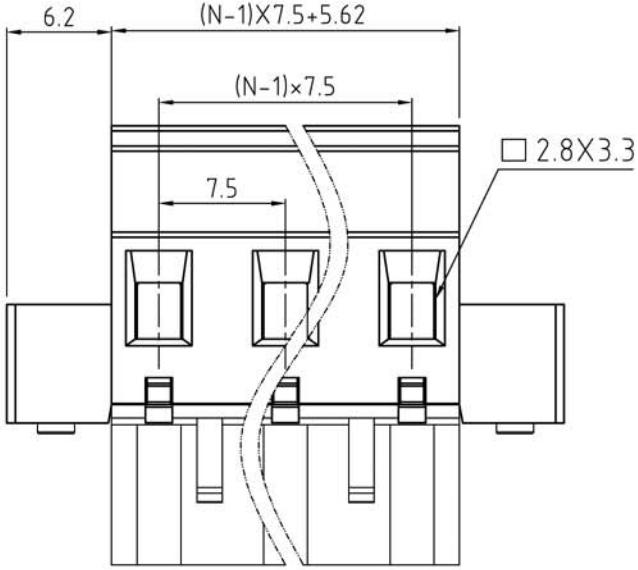

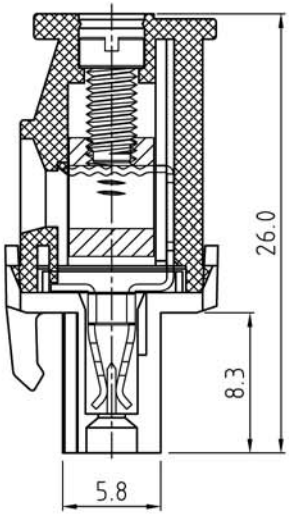

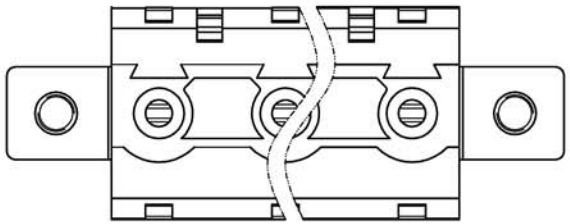

Technical Data:

Material:

Contact(metal housing): Copper Alloy with Ni plated

Terminal screw: Steel galvanized with Cr3+ plated

Wire guard: Copper Alloy,Tin plated.

Insulator body(housing): Polyamide(UL94V-0)

Electrical

Voltage rating: 300VAC

Current rating: 16 Amps/way max

Contact resistance: 20mΩ (max)

Withstanding Voltage: 2500VAC(1min) Test time=60sec/1pcs

Wire range: 12-26AWG

Mechanical:

Torque: 5.0kgf.cm/M3

Operating temperature: -40°C to +105°C

Soldring reliability:

Test temperature= 250°C±10°C

5 seconds max

Ordering Information:

F75-C-7 XX-X 0 0 X 0 0 0 0

XX: 2 ~ 24 (02 ~ 24)

X: 1 "-" SCREW; 2 "-/+" SCREW

X: 5 GREEN; 6 BLUE

WELINK 上海拓尔普电子科技有限公司 Welink International Co.,LTD.

TOLERANCE X. ±0.50 X.X ±0.30 X.XX ±0.20 X° ±1°	APPROVED:		NAME: F75-C Pitch 7.5mm -series
	CHECKED:		
	DRAWN: Ling Yu 2018,1,18		
	UNITS: mm	REV: A	PART NO: F75C7XX00XX0000
	SCALE: 3 / 1	PAGE: 1 / 1	DWG NO: 9F75C7001A